36V, Low-Power Dual-Operational Amplifier

FEATURES

- **Voltage Gain: 105dB (Typ)**
- **Input Bias Current: 10nA (Typ)**
- **Input Offset Voltage: 1mV (Typ)**
- **Low Supply Current: 0.5mA (Typ)**
- **Wide Power Supply Voltage: 3V to 36V or ±1.5V to ±18V**
- **Large Output Voltage Swing: (V-) to (V+) -1.5V**
- **Input Common Mode Voltage Range include GND/(V-)**

APPLICATIONS

- **Signal Conditioning**
- **Sensor Interface**
- **Medical/Industrial Instrumentation**
- **Power Converter/Inverter**

PRODUCT DESCRIPTION

The TS358 consists of two independent, high gain and internally frequency compensated operational amplifiers. These dual operational amplifiers feature low power consumption, a common mode input voltage range extending to ground/(V-), and single supply or split supply operation. They can operate at supply voltages as low as 3.0V or as high as 36V. The common mode input range includes the negative supply which eliminates the necessity for external biasing. The output voltage range also includes the negative power supply voltage.

The TS358 is specified at the full temperature range of −40˚C to +125˚C and available in Green SOP8, MSOP8 and TSSOP8 packages.

PIN ASSIGNMENTS

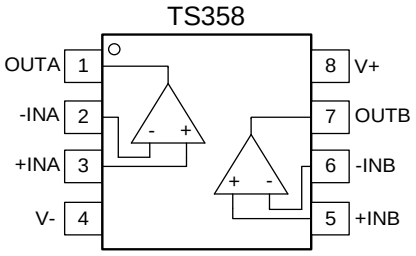

SOP8, MSOP8, TSSOP8

ORDERING INFORMATION

Model	Part Number	Eco Plan	Package	Container, Pack Qty
TS358	TS358SOP8R	RoHS	SOP8	Reel, 2500
TS358	TS358MSOP8R	RoHS	MSOP8	Reel, 3000
TS358	TS358TSSOP8R	RoHS	TSSOP8	Reel, 4000

ABSOLUTE MAXIMUM RATINGS

Over operating free-air temperature range (unless otherwise noted) (1)

Parameter	Min	Max	Unit
Supply Voltage		40	V
Signal Input Terminal Voltage	(V-) - 0.5	(V+) + 0.5	V
Operating Temperature	-40	150	˚C
Junction Temperature		150	˚C
Storage Temperature Range	-65	150	˚C
Lead Temperature (Soldering, 10s)		260	˚C
ESD MM		100	V
ESC CDM		1500	V

(1) Stresses beyond those listed under “Absolute Maximum Ratings” may cause permanent damage to the device. This is a stress rating only and functional operation of the device at these or any other conditions beyond those indicated in the operational sections of this specification is not implied. Exposure to absolute maximum rating conditions for extended periods may affect device reliability.

ESD CAUTION

ESD (electrostatic discharge) sensitive device
Charged devices and circuit boards can discharge without detection. Although this product features patented or proprietary protection circuitry, damage may occur on devices subjects to high energy ESD. Therefore, proper ESD precautions should be taken to avoid performance degradation or loss of functionality.

ELECTRICAL CHARACTERISTICS

Boldface limits apply over the specified temperature range, **T_A = −40˚C to +125˚C.**

At T_A = +25˚C, V_S = 5V (unless otherwise noted)

Parameter		Operating Conditions		Min	Typ	Max	Unit
V_S	Power Supply Voltage			3		36	V
I_S	Supply Current	I_O = 0mA	V_S = 30V		0.5	2	mA
			V_S = 5V		0.4	1.2	mA
PSRR	Power Supply Rejection Ratio	V_S = 5V to 30V, V_{CM} = Vo = 1.4V		70	105		dB
		T_A = −40˚C to +125˚C		**60**			**dB**
Input Characteristics							
V_{OS}	Input Offset Voltage	V_S = 5V to 30V, V_O = 1.4V, R_S = 0Ω			1	5	mV
		T_A = −40˚C to +125˚C				**7**	**mV**
dV_{OS}/dT	**Average Drift**	**V_S = 5V to 30V, V_O = 1.4V, R_S = 0Ω**			**7**		**μV/˚C**
I_B	Input Bias Current	I_{IN+} or I_{IN-}, V_{CM} = 0V			10	100	nA
		T_A = −40˚C to +125˚C				**200**	**nA**
I_{OS}	Input Offset Current	I_{IN+} - I_{IN-}, V_{CM} = 0V			5	30	nA
		T_A = −40˚C to +125˚C				**100**	**nA**
$V_{IN+/-}$	Input Voltage Range			(V-)		(V+) -1.5	V
CMRR	Common Mode Rejection Ratio	(V-) < V_{CM} < (V+) -1.5V		65	70		dB
		T_A = −40˚C to +125˚C		**60**			**dB**
AOL	Open-Loop Voltage Gain	Vs = 15V, R_L ≥ 2kΩ, 1V < Vout < 11V		90	104		dB
		T_A = −40˚C to +125˚C		**83**			**dB**
Output Characteristics							
V_{OH}	Output Voltage Swing from Rail	Vs = 30V, R_L = 2kΩ			2	3.8	V
		T_A = −40˚C to +125˚C				**4**	**V**
		Vs = 30V, R_L = 10kΩ			2	2.8	V
		T_A = −40˚C to +125˚C				**3**	**V**
V_{OL}	Output Voltage	Vs = 5V, R_L = 10kΩ			5	20	mV
		T_A = −40˚C to +125˚C				**30**	**mV**
I_{OUT}	Output Current	Source	V_{IN+} = 1V, V_{IN-} = 0V, V_S = 15V, V_O = 2V	20	40		mA
		Sink	V_{IN+} = 0V, V_{IN-} = 1V, V_S = 15V, V_O = 2V	10	15		mA
			V_{IN+} = 0V, V_{IN-} = 1V, V_S = 15V, V_O = 0.2V	12	50		μA
I_{SC}	Short Circuit Current	V_S = 15V, V_{out} = 0V			40	60	mA
Dynamic Performance							
GBW	Gain Bandwidth Product				1		MHz
SR	Slew Rate	G = +1			0.25		V/μs
V_{noise}	Input Voltage Noise	f = 0.1Hz to 10Hz			1.5		μVpp
Temperature Range							
θ_{JA}	Specified Range			-40		+125	˚C
	Operating Range			-55		+150	˚C
	Storage Range			-65		+150	˚C
	SOP8, MSOP8, TSSOP8				115		˚C/W

TYPICAL CHARACTERISTICS

At T_A = +25 ˚C, R_L = 10kΩ connected to GND, and V_{OUT} = 1.4V (unless otherwise noted)

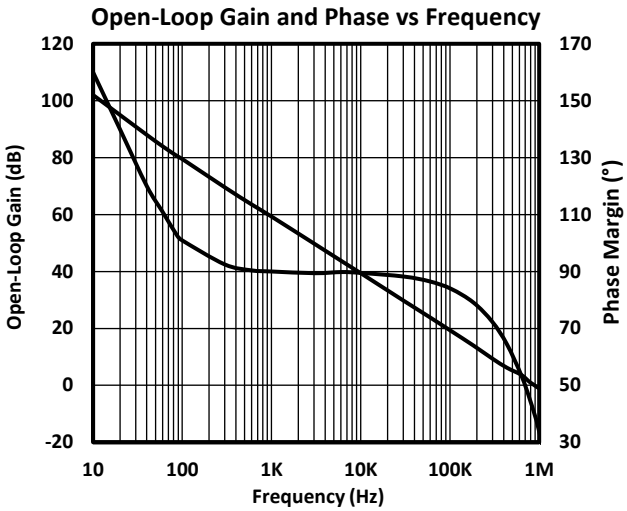

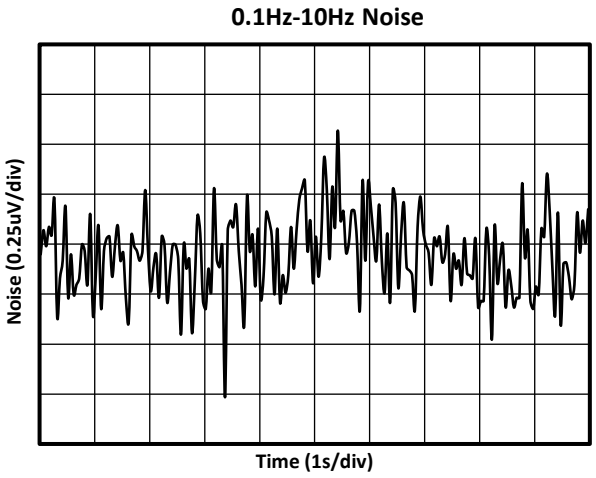

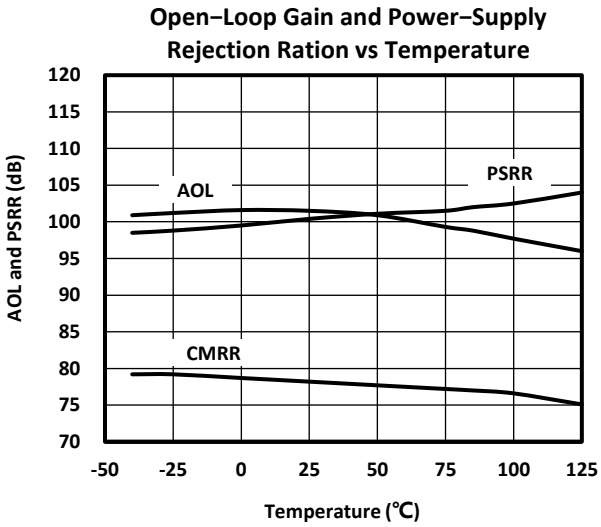

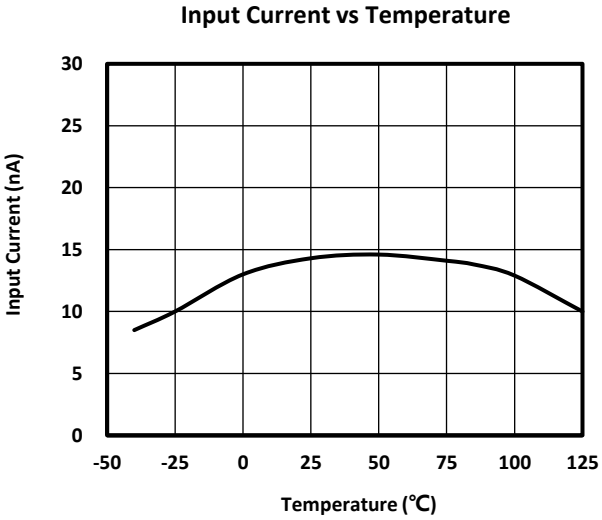

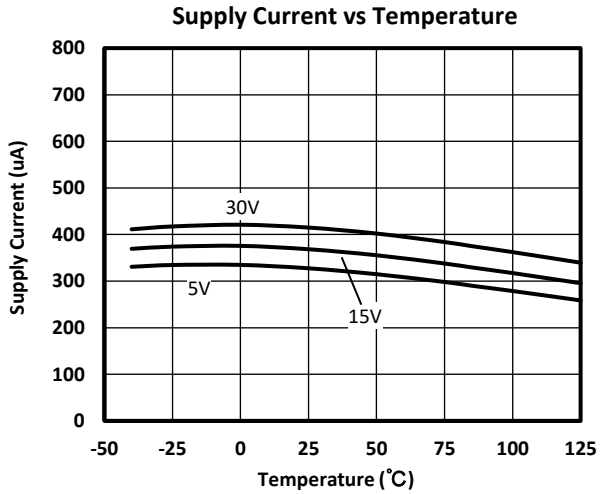

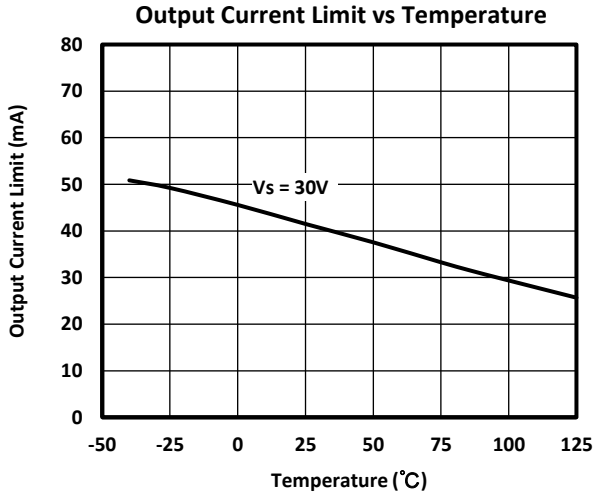

TYPICAL CHARACTERISTICS (CONTINUE)

At T_A = +25 ˚C, R_L = 10kΩ connected to GND, and V_{OUT} = 1.4V (unless otherwise noted)

Input Offset Voltage vs Common Mode Input Voltage

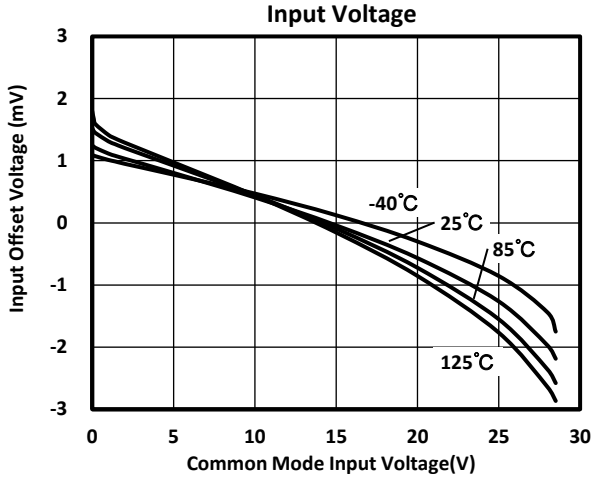

Input Offset Voltage vs Supply Voltage

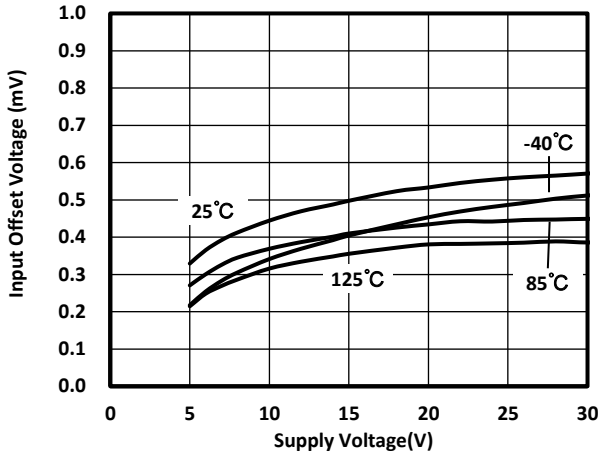

Small Signal Non-Inverting Pulse Response

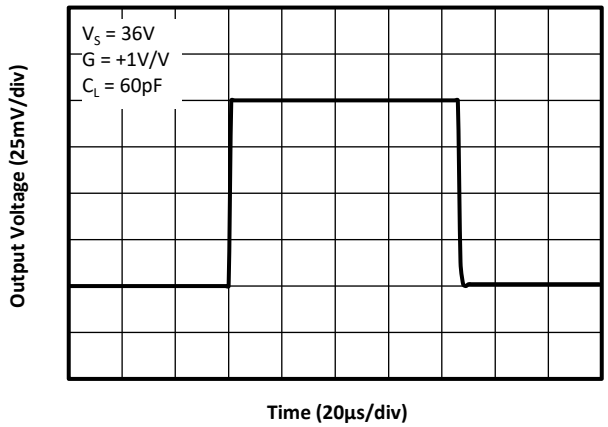

Large Signal Non-Inverting Pulse Response

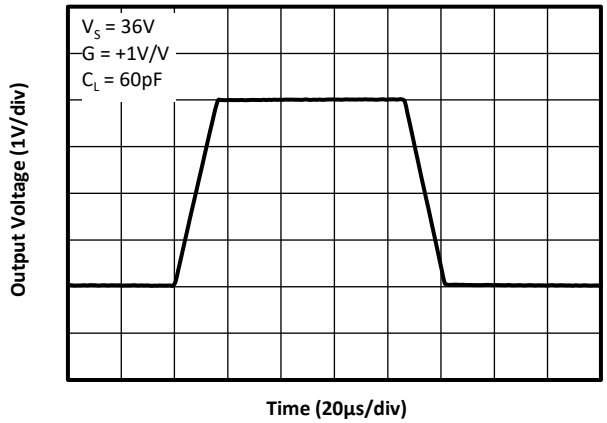

TYPICAL APPLICATION

Two-Pole Micro-Power Sallen-Key Low-Pass Filter

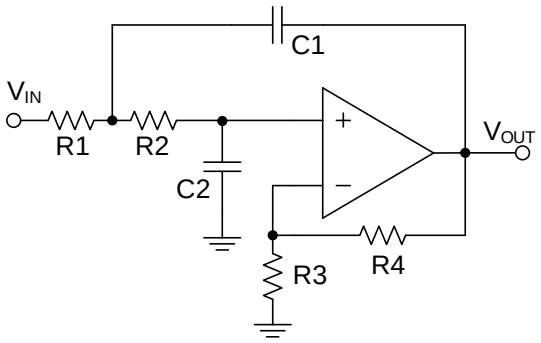

Figure 1

Figure 1 shows a micro-power two-pole Sallen-Key Low-Pass Filter. For best results, the filter's cut-off frequency should be 8 to 10 times lower than the OPA's crossover frequency. Additional OPA's phase margin shift can be avoided if the OPA's bandwidth-to-signal ratio is greater than 8.

Inverting Amplifier

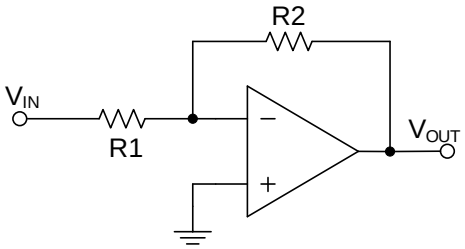

Figure 2

A typical application for an operational amplifier is an inverting amplifier. This amplifier takes a positive voltage on the input, and makes it a negative voltage of the same magnitude. In the same manner, it also makes negative voltages positive.

MECHANICAL DIMENSIONS

SOP8 PACKAGE MECHANICAL DRAWING

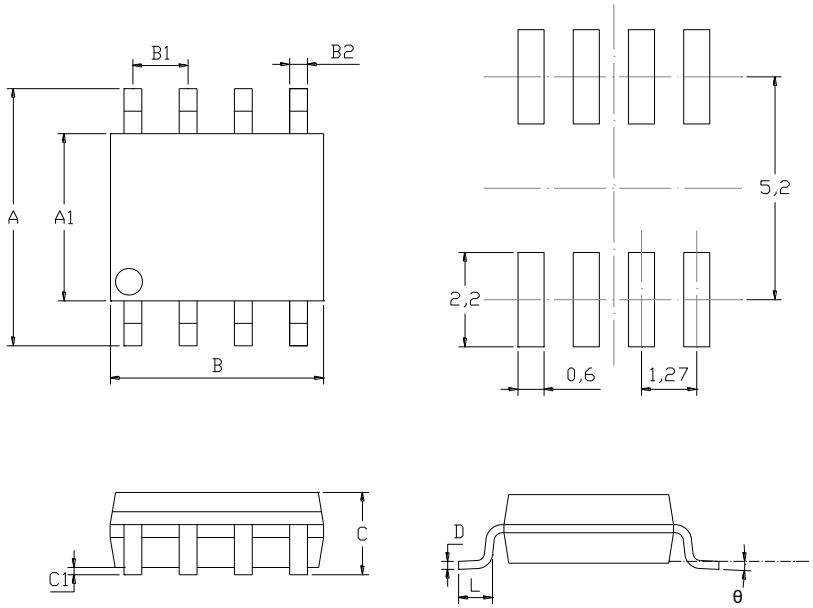

SOP8 PACKAGE MECHANICAL DATA

symbol	dimensions			
	millimeters		inches	
	min	max	min	max
A	5.800	6.200	0.228	0.244
A1	3.800	4.000	0.150	0.157
B	4.700	5.100	0.185	0.201
B1	1.270		0.050	
B2	0.330	0.510	0.013	0.020
C		1.750		0.069
C1	0.100	0.250	0.004	0.010
L	0.400	1.270	0.016	0.050
D	0.170	0.250	0.007	0.010
θ	0º	8º	0º	8º

MSOP8 PACKAGE MECHANICAL DRAWING

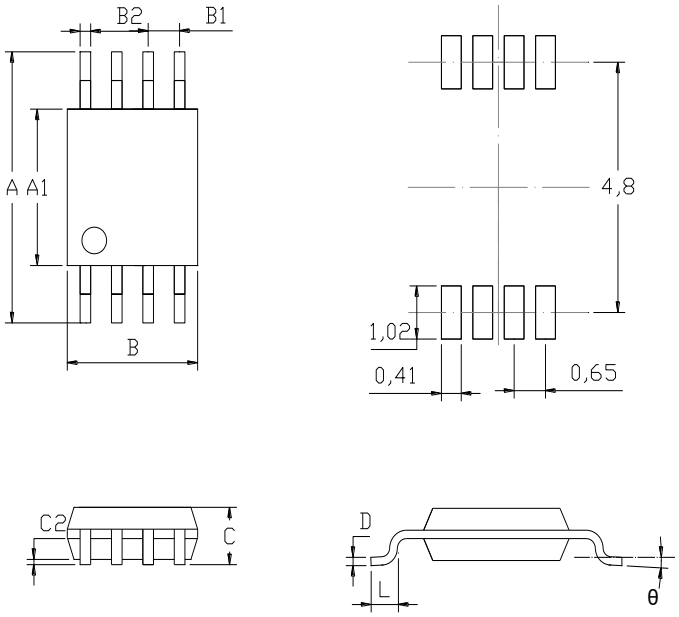

MSOP8 PACKAGE MECHANICAL SPECIFICATIONS

symbol	dimensions			
	millimeters		inches	
	min	max	min	max
A	4.750	5.050	0.187	0.199
A1	2.900	3.100	0.114	0.122
B	2.900	3.100	0.114	0.122
B1	0.650		0.026	
B2	0.250	0.380	0.010	0.015
C	0.820	1.100	0.032	0.043
C2	0.020	0.150	0.001	0.006
L	0.400	0.800	0.016	0.031
D	0.090	0.230	0.004	0.009
θ	0º	6º	0º	6º

TSSOP8 PACKAGE MECHANICAL DRAWING

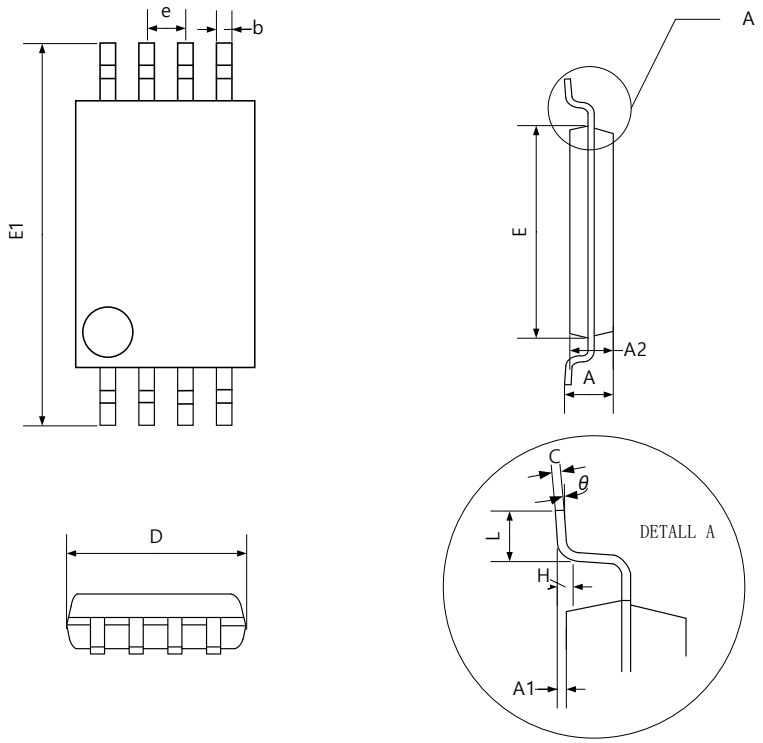

TSSOP8 PACKAGE MECHANICAL DATA

symbol	dimensions			
	millimeters		inches	
	min	max	min	max
D	2.900	3.100	0.114	0.122
E	4.300	4.500	0.169	0.177
b	0.190	0.300	0.007	0.012
c	0.090	0.200	0.004	0.008
E1	6.250	6.550	0.246	0.258
A		1.200		0.047
A2	0.800	1.000	0.031	0.039
A1	0.050	0.150	0.002	0.006
e	0.650		0.026	
L	0.500	0.007	0.020	0.028
H	0.250		0.010	
θ	1º	7º	1º	7º

TAPE AND REEL INFORMATION

REEL DIMENSIONS

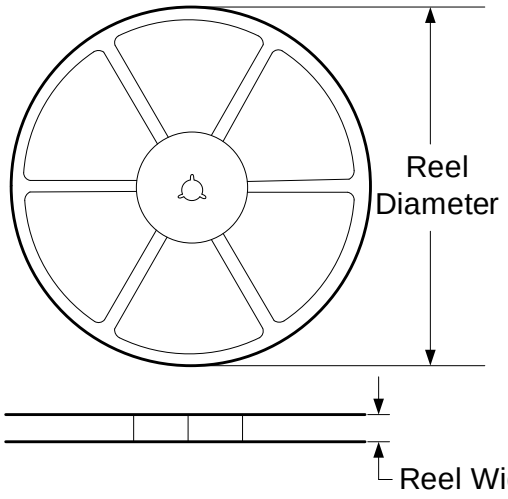

TAPE DIMENSIONS

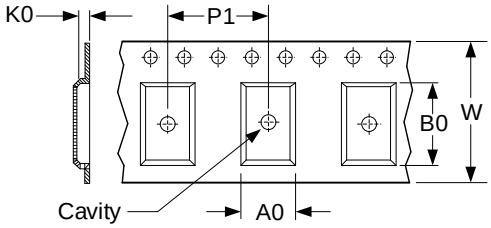

A0	Dimensioon designed to accommodate the component width
B0	Dimensioon designed to accommodate the component length
K0	Dimensioon designed to accommodate the component width thickness
W	Overall width of the carrier tape
P1	Pitch between successive cavity centers

QUADRANT ASSIGNMENTS FOR PIN 1 ORIENTATION IN TAPE

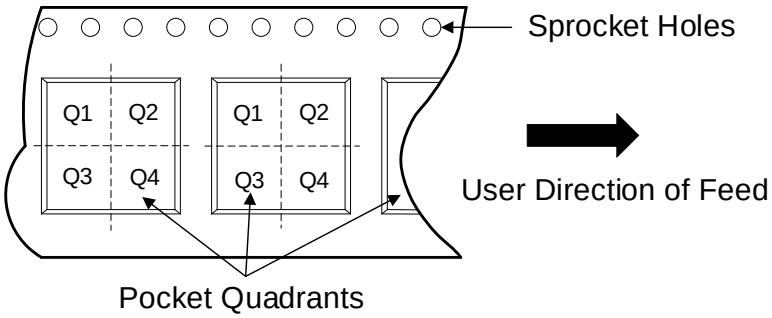

Device	Package Type	Pins	SPQ	Reel Diameter (mm)	Reel Width W1 (mm)	A0 (mm)	B0 (mm)	K0 (mm)	P1 (mm)	W (mm)	Pin1 Quadrant
TS358SOP8R	SOP8	8	2500	330.0	12.4	6.4	5.4	2.1	8.0	12.0	Q1
TS358MSOP8R	MSOP8	8	3000	330.0	12.4	5.2	3.3	1.5	8.0	12.0	Q1
TS358TSSOP8R	TSSOP8	8	4000	330.0	12.4	6.4	5.4	2.1	8.0	12.0	Q1

REVISION HISTORY

NOTE: Page numbers for previous revisions may be different from that of the current version.

CONTACT INFORMATION

Trusignal Microelectronics

Phone: +86 512-65923982
Fax: +86 512-65923995
Email: support@kunyuanic.com; sales@kuyuanic.com