1-Bit Non-Reversing Voltage-Level Translator

FEATURES

- **Wide Dual-Supply Voltage Range: 0.9V to 3.6V**
- **High Speed and Low Propagation Delay**
- **Low Static Power Consumption**
- **Power-Off Protection**
- **High Impedance Input and Output when Power Off**
- **No Power-Supply Sequencing Required of V_{CCA} & V_{CCB}**
- **Support for Step-Up/Down Conversion**

APPLICATIONS

- **Smartphones**
- **PDAs**
- **Desktop PCs**
- **Portable Devices**
- **Industrial**
- **Telecommunications**

PRODUCT DESCRIPTION

The TS8111 is a 1-bit dual-supply non-reversing voltage level translator which can be used in mixed-voltage systems. Both the two separate configurable power supply rails V_{CCA} and V_{CCB} range from 0.9V to 3.6V. The input and output ports can reach to the different power supply rails respectively.This feature allows universal low voltage interfacing between any of the 1V, 1.2 V, 1.5 V, 1.8 V, 2.5 V and 3.3V voltage nodes. The device only support voltage level conversion from input A to output B.

Either V_{CCA} or V_{CCB} is at GND or power off, the output is placed in high-impedance state.

PIN ASSIGNMENT

SOT-353
(TOP VIEW)

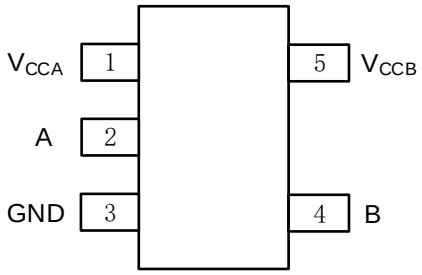

TYPICAL OPERATING CIRCUIT

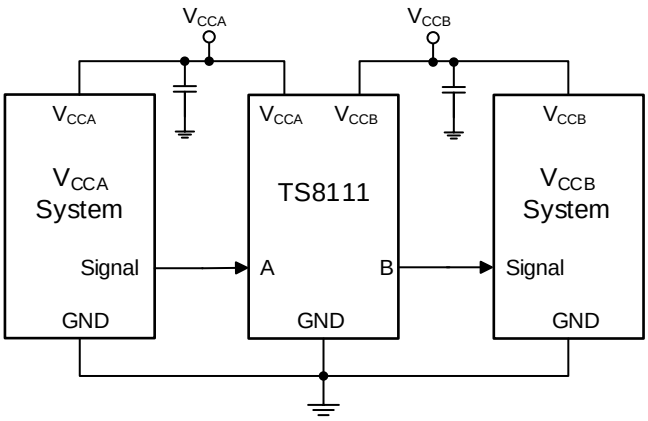

PIN FUNCTIONS

NUMBER	NAME	DESCRIPTION
1	V_{CCA}	Input port supply voltage
2	A	Input port
3	GND	Ground
4	B	Output port
5	V_{CCB}	Output port supply voltage

TRUTH TABLE

A-INPUT	B-OUTPUT
L	L
H	H

ORDERING INFORMATION

Model	Part Number	Eco Plan	Package	Container, Pack Qty
TS8111	TS8111SOT3535LR	RoHS	SOT-353	Reel,3000

ABSOLUTE MAXIMUM RATINGS

Over operating temperature range (unless otherwise noted) (1)

Parameter		Min	Max	Unit
V_{CCA}, V_{CCB}	Supply Voltage	-0.3	+4.6	V
V_I	Input Voltage	-0.5	+4.6	V
V_O	Output Voltage	-0.5	+4.6	V
I_{IK}	Input Clamp Current (V_I < 0)		-50	mA
I_{OK}	Output Clamp Current (V_O < 0)		-50	mA
I_O	Continuous Output Current		±50	mA
	Continuous Current Through V_{CC} or GND		±100	mA
T_{STG}	Storage Temperature Range	-65	+150	°C
ESD HBM			±4000	V
ESD CDM			±1500	V

(1) Stresses beyond those listed under “Absolute Maximum Ratings” may cause permanent damage to the device. This is a stress rating only and functional operation of the device at these or any other conditions beyond those indicated in the operational sections of this specification is not implied. Exposure to absolute maximum rating conditions for extended periods may affect device reliability.

ESD CAUTION

ESD (Electrostatic Discharge) sensitive device. Charged devices and circuit boards can discharge without detection. Although this product features patented or proprietary protection circuitry, damage may occur on devices subjects to high energy ESD. Therefore, proper ESD precautions should be taken to avoid performance degradation or loss of functionality.

RECOMMENDED OPERATING CONDITIONS

Parameter		Min	Max	Unit
V_{CCA}, V_{CCB}	Supply Voltage	0.9	3.6	V
V_I	Input Voltage	GND	V_{CCA}	V
V_O	Output Voltage	GND	V_{CCB}	V
T_A	Operating Temperature	-40	+125	°C
Δt/Δv	Input Transition Rise or Fall Rate V_I from 30% to 70% of V_{CCA}, V_{CCA} = 3.3V±0.3V		10	ns

ELECTRICAL CHARACTERISTICS

T_A = −40°C to +125°C, I_O = 0, unless otherwise noted.

Parameter		Operating Conditions		V_{CCA}(V)	V_{CCB}(V)	Min	Typ	Max	Unit
V_{IH}	Input High-level Voltage			0.9 - 1.2	0.9-3.6	0.65*V_{CCA}			V
				1.2 - 2.3		0.9*V_{CCA}			
				2.3 - 2.7		0.65*V_{CCA}			
				2.7 - 3.6		2.0			
V_{IL}	Input Low-level Voltage			0.9 - 1.2	0.9-3.6			0.1*V_{CCA}	V
				1.2 - 2.3				0.35*V_{CCA}	
				2.3 - 2.7				0.7	
				2.7 - 3.6				0.8	
V_{OH}	Output High-level Voltage	$V_I = V_{IH}$	I_O = -100μA	0.9 - 3.6	0.9 - 3.6	V_{CCB} - 0.2			V
			I_O = -0.5mA	0.9	0.9	0.75*V_{CCB}			
			I_O = -2mA	1.4	1.4	1.05			
			I_O = -6mA	1.65	1.65	1.25			
				2.3	2.3	2.0			
			I_O = -12mA	2.3	2.3	1.8			
				2.7	2.7	2.2			
			I_O = -18mA	2.3	2.3	1.7			
				3.0	3.0	2.4			
			I_O = -24mA	3.0	3.0	2.2			
V_{OL}	Output Low-level Voltage	$V_I = V_{IL}$	I_O = 100μA	0.9 - 3.6	0.9 - 3.6			0.1	V
			I_O = 0.5mA	1.1	1.1			0.3	
			I_O = 2mA	1.4	1.4			0.35	
			I_O = 6mA	1.65	1.65			0.3	
			I_O = 12mA	2.3	2.3			0.4	
				2.7	2.7			0.4	
			I_O = 18mA	2.3	2.3			0.6	
				3.0	3.0			0.4	
			I_O = 24mA	3.0	3.0			0.55	
I_I	Input Leakage Current	$V_I = V_{CCA}$ or GND		0.9 - 3.6	0.9 - 3.6			±1.0	μA
I_{OFF}	Power Off Leakage Current	Input: V_I = 0V to 3.6V		0 - 3.6	0			±5.0	μA
		Output: V_O = 0V to 3.6V		0	0 - 3.6			±5.0	μA
I_{CCA}	Quiescent Supply Current	$V_I = V_{CCA}$ or GND,I_O=0		0.9 - 3.6	0.9 - 3.6			2.0	μA
				0.9 - 3.6	V_{CCA}			2.0	
I_{CCB}	Quiescent Supply Current	$V_I = V_{CCA}$ or GND,I_O=0		0.9 - 3.6	0.9 - 3.6			5.0	μA
				0.9 - 3.6	V_{CCA}			2.0	
I_{CC}	$I_{CCA} + I_{CCB}$	$V_I = V_{CCA}$ or GND,I_O=0		0.9 - 3.6	0.9 - 3.6			5.2	μA
ΔI_{CC}	Additional Supply Current	$V_I = V_{CCA}$ - 0.6V		3.3	0 - 3.6			40	μA
C_I	Input Capacitance	$V_I = V_{CCA}$ or GND		0 - 3.6	V_{CCA}		2.5		pF
C_O	Output Capacitance	V_O = GND		0 - 3.6	0		3.8		pF

SWITCHING CHARACTERISTICS

C_L=15pF, R_L=2kΩ, T_A = −40˚C to +125˚C, unless otherwise noted.

Parameter	V_{CCA} (V)	V_{CCB} (V)	Typ	Max	Unit
t_{PLH}/t_{PHL}	3.3	3.3	2.2	4.0	ns
		2.5	2.5	4.5	
		1.8	3.4	5.5	
		1.2	6.5	8.0	
		0.9	21.3	38.5	
	2.5	3.3	2.4	4.5	
		2.5	2.7	5.0	
		1.8	3.6	6.0	
		1.2	6.7	8.5	
		0.9	21.4	39.0	
	1.8	3.3	2.6	5.0	
		2.5	3.0	5.5	
		1.8	4.0	7.0	
		1.2	7.7	9.0	
		0.9	22.6	41.5	
	1.2	3.3	6.5	8.0	
		2.5	6.7	8.5	
		1.8	7.1	9.0	
		1.2	9.9	12.0	
		0.9	27.5	48.0	
	0.9	3.3	19.3		
		2.5	19.8		
		1.8	21.2		
		1.2	24.8		
		0.9	39		

Propagation Delay Test Circuit

C_L = 15pF or equivalent (includes probe and jig capacitance), R_L = 2kΩ

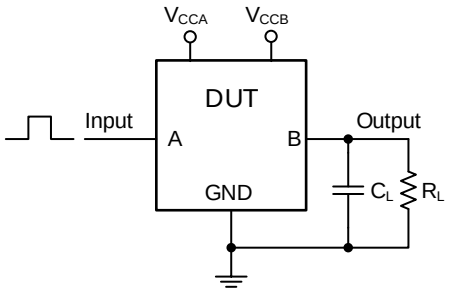

Propagation Delay Waveform

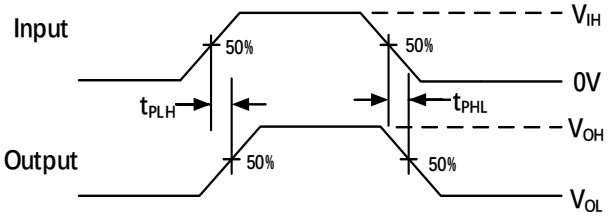

TYPICAL CHARACTERISTICS

At T_A = +25°C, V_{CCA}=0.9V-3.6V, V_{CCB}=0.9V-3.6V, unless otherwise noted.

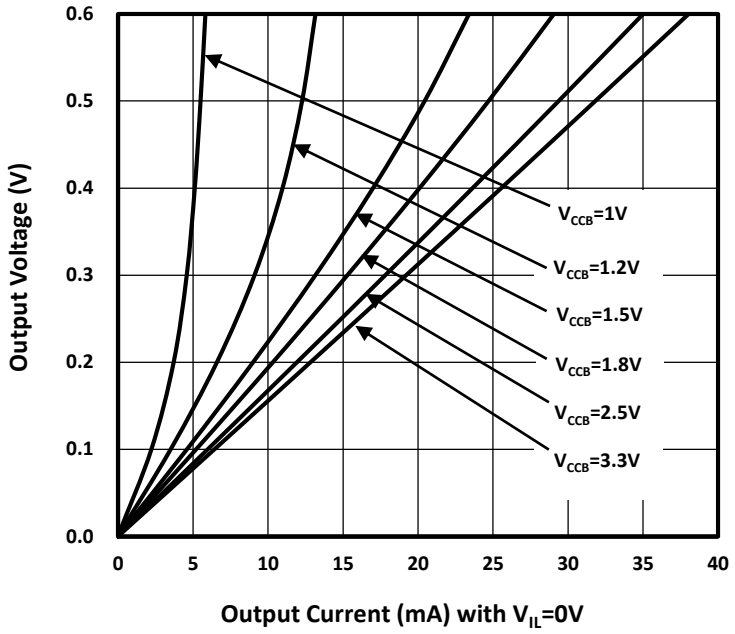

MECHANICAL DIMENSIONS

SOT-353 PACKAGE MECHANICAL DRAWING

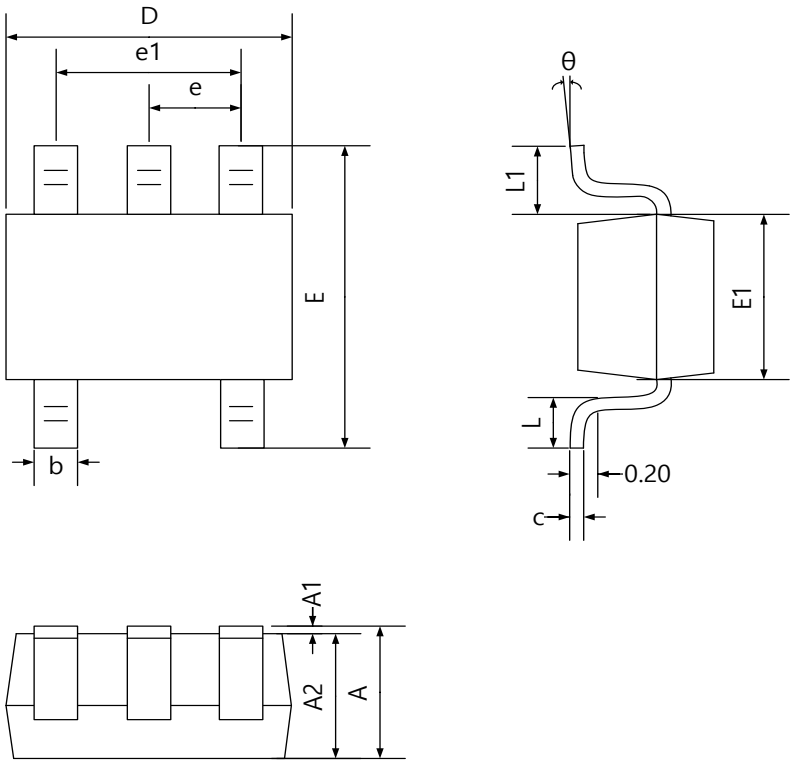

SOT-353 PACKAGE MECHANICAL DATA

Symbol	Dimensions In Millimeters		Dimensions In Inches	
	Min.	Max.	Min.	Max.
A	0.900	1.100	0.035	0.043
A1	0.000	0.100	0.000	0.004
A2	0.900	1.000	0.035	0.039
b	0.150	0.350	0.006	0.014
c	0.080	0.150	0.003	0.006
D	2.000	2.200	0.079	0.087
E	2.150	2.450	0.085	0.096
E1	1.150	1.350	0.045	0.053
e	0.650 TYP.		0.026 TYP.	
e1	1.200	1.400	0.047	0.055
L	0.260	0.460	0.010	0.018
L1	0.525 REF.		0.021 REF.	
θ	0°	8°	0°	8°

TAPE AND REEL INFORMATION

REEL DIMENSIONS

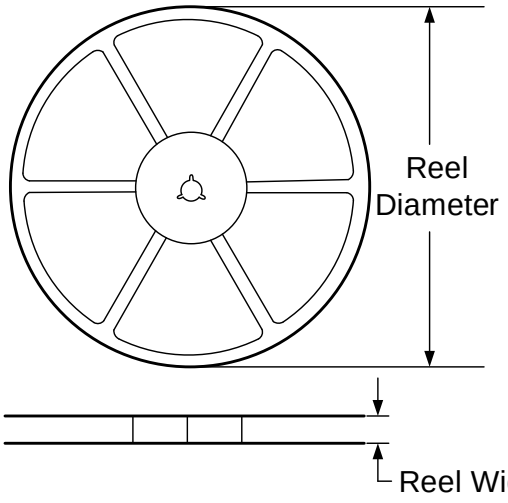

TAPE DIMENSIONS

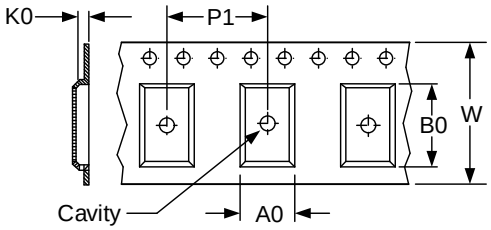

A0	Dimension designed to accommodate the component width
B0	Dimension designed to accommodate the component length
K0	Dimension designed to accommodate the component width thickness
W	Overall width of the carrier tape
P1	Pitch between successive cavity centers

QUADRANT ASSIGNMENTS FOR PIN 1 ORIENTATION IN TAPE

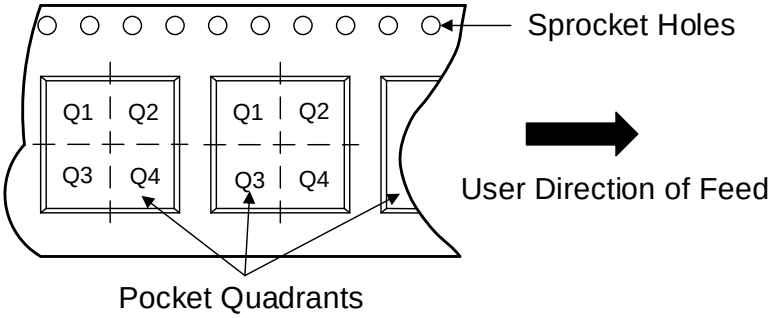

Device	Package Type	Pins	SPQ	Reel Diameter (mm)	Reel Width W1 (mm)	A0 (mm)	B0 (mm)	K0 (mm)	P1 (mm)	W (mm)	Pin1 Quadrant
TS8111SOT3535LR	SOT-353	5	3000	178.0	12.1	2.3	2.55	1.2	4.0	8.0	Q3

REVISION HIETORY

NOTE: Page numbers for previous revisions may be different from that of the current version.

CONTACT INFORMATION

Trusignal Microelectronics

Phone: +86 512-65923982
Fax: +86 512-65923995
Email: support@kunyuanic.com; sales@kunyuanic.com